LMS10D

COMPONENTS:

1 Rotating contact surface
1a Rotating contact surface
2 Stationary contact surface
2a Stationary contact surface
3 O-rings
3a O-rings
3b O-rings
3c O-rings
4 Springs
5 Metal frame
5a Set screws
5b Ring

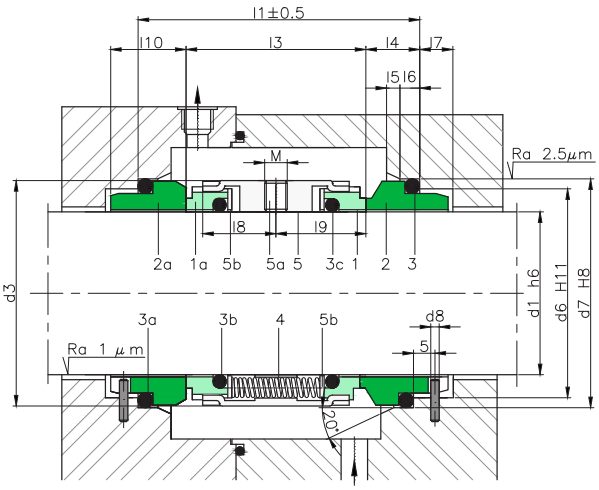

SECTORS:

CHARACTERISTICS:

- Unbalanced.
- System attached to the shaft by allen screws.
- Not dependent on the rotation direction.

OPERATING LIMITS:

d_1= 18 ÷ 100 mm p= 16 kg/cm²

v= 20 m/s t= -15÷ +200ºC (*)

(*) The temperature resistance depends on the material of the secondary seals used.

The operating limits are defined by the PV factor which is determined for the sealing system characteristics and those of the application.

DESCRIPTION:

Double seal for working with barrier fluids in which the springs are isolated from the fluid product.
API 53A and API54 assemblies.
Recommended in applications with toxic, pollutant or potentially dangerous products in which safety is an important factor. Available with a pumping ring on the casing to reduce the temperature between the contact surfaces and facilitate the barrier fluid movement (reference LMS10-F). Available in a balanced version with a stepped shaft (reference LM10DB).
Contact surface kits available.

DIMENSIONS CHART

Dimensions in mm

Shaft	Rotary part					Stationary part								Total length
mm	d_3	l_3	l_8	l_9	M	d_6	d_7	d_8	l_4	l_5	l_6	l_7	l_{10}	l_1
18	33	38	17.0	19.0	M5	27	33	3	11.5	2.0	5	9	19.5	61.0
20	35	38	17.0	19.0	M5	29	35	3	11.5	2.0	5	9	19.5	61.0
22	37	38	17.0	19.0	M5	31	37	3	11.5	2.0	5	9	19.5	61.0
24	39	38	17.0	19.0	M5	33	39	3	11.5	2.0	5	9	19.5	61.0
25	40	38	17.0	19.0	M5	34	40	3	11.5	2.0	5	9	19.5	61.0
28	43	39	17.5	19.5	M6	37	43	3	11.5	2.0	5	9	19.5	62.0
30	45	39	17.5	19.5	M6	39	45	3	11.5	2.0	5	9	19.5	62.0
32	47	39	17.5	19.5	M6	42	48	3	11.5	2.0	5	9	19.5	62.0
33	48	39	17.5	19.5	M6	42	48	3	11.5	2.0	5	9	19.5	62.0
35	50	39	17.5	19.5	M6	44	50	3	11.5	2.0	5	9	19.5	62.0
38	55	41	18.5	20.5	M6	49	56	4	14.0	2.0	6	9	22.0	69.0
40	57	42	19.0	21.0	M6	51	58	4	14.0	2.0	6	9	22.0	70.0
43	60	42	19.0	21.0	M6	54	61	4	14.0	2.0	6	9	22.0	70.0
45	62	42	19.0	21.0	M6	56	63	4	14.0	2.0	6	9	22.0	70.0
48	65	42	19.0	21.0	M6	59	66	4	14.0	2.0	6	9	22.0	70.0
50	67	43	19.5	21.5	M6	62	70	4	15.0	2.5	6	9	23.0	73.0
53	70	43	19.5	21.5	M6	65	73	4	15.0	2.5	6	9	23.0	73.0
55	72	43	19.5	21.5	M8	67	75	4	15.0	2.5	6	9	23.0	73.0
58	79	56	23.5	28.0	M8	70	78	4	15.0	2.5	6	9	23.0	86.0
60	81	56	23.5	28.0	M8	72	80	4	15.0	2.5	6	9	23.0	86.0
63	84	55	24.5	27.5	M8	75	83	4	15.0	2.5	6	9	-	85.0
65	86	55	24.5	27.5	M8	77	85	4	15.0	2.5	6	9	23.0	85.0
68	89	55	24.5	27.5	M8	81	90	4	18.0	2.5	7	9	26.0	91.0
70	91	56	23.5	28.0	M8	83	92	4	18.0	2.5	7	9	26.0	92.0
75	99	56	25.5	28.0	M8	88	97	4	18.0	2.5	7	9	26.0	92.0
80	104	56	25.5	28.0	M8	95	105	4	18.2	3.0	7	9	26.2	92.5
85	100	56	25.0	28.0	M8	100	110	4	18.2	3.0	7	9	26.2	92.5
90	114	56	25.5	28.0	M8	105	115	4	18.2	3.0	7	9	26.2	92.5
95	119	56	25.0	28.0	M8	110	120	4	17.2	3.0	7	9	25.2	90.5
100	124	56	25.0	28.0	M8	115	125	4	17.2	3.0	7	9	25.2	90.5

Dimensions subject to changes or modifications.

10/2017